THERMX Lab batch dryer

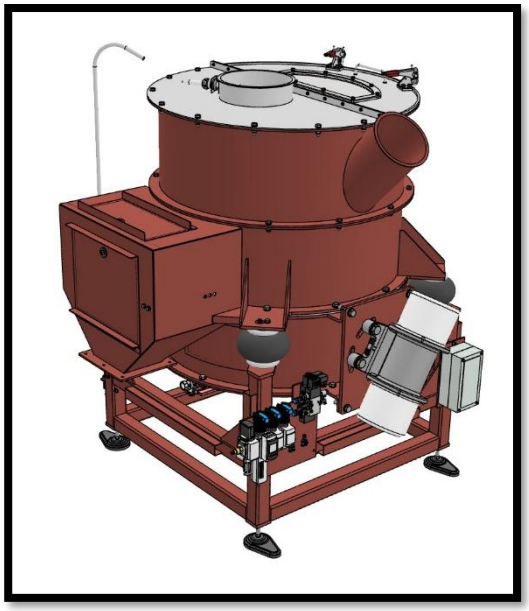

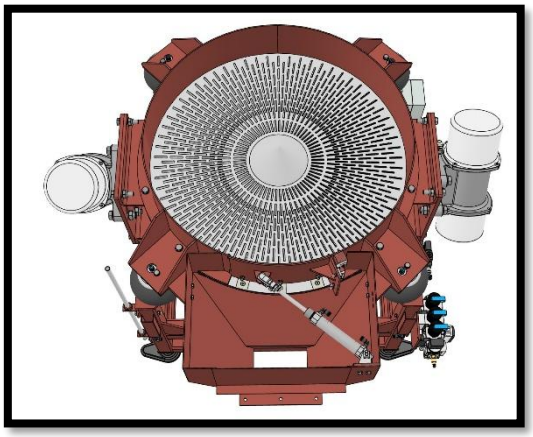

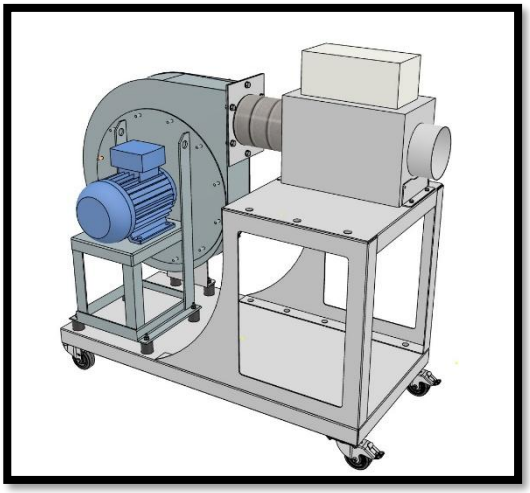

Description

- Easy post-treatment drying of seeds after the seed treatment process
- Post-treatment drying using warm or conditioned air
- Uniform, gentle drying through shaking motion
- Fluidization via vibration and an innovative round airflow surface for very gentle movement of the seeds
- Mounted on air bags
- Integrated ventilation following the drying process
- Automatic discharge of seeds
- Very compact footprint
- Available in various container sizes
- Seed-clean after every batch
- Large inspection and cleaning openings

Features

- High-quality and gentle drying of seeds
- Control via touchscreen display with PLC
- Automatic and manual operation possible
- Volume starting at 60 liters
- Includes blower and hot air- or conditioned generator
- Max. air flow rate 2000 m³/h
- 15 kW air heater or supply of conditioned air

Available Sizes

- Type 700 with 60 L
- Type 950 with 200 L
- Type 1200 with 400 L

Willy Niklas GmbH Apparatebau · Dohrweg 55 · D-41066 Mönchengladbach · +49 (0) 2161 60031 · +49 (0) 2161 601758 · office@wn-niklas.de